Golden Coast

WATERCO
EUROPE LTD
water, the liquid of life

Thermoplastic Filters

Waterco Thermoplastic Sand Filters

Thermoplastic sand filters: economical low maintenance filtration.

Why Sand Filtration?

Sand is the oldest and most popular method of filtration. It operates by way of depth filtration where dirt is driven through a sand bed and then trapped in the minute spaces between the sand particles. Initially, a clean bed will remove larger particles and as the bed starts to load up, it will remove finer particles.

Thermoplastic Filters for Minimal Maintenance.

Our thermoplastic filters utilise a multiport valve to control the flow of water within the filter vessel. Cleaning the filter simply requires turning the multiport lever from the `filter' position to the `backwash' position. This allows the water to reverse its course through the sand bed, and thus flushing trapped particles to the drain.

Thermoplastic Construction.

Incorporating the lastest advances in thermoplastic technology, Waterco thermoplastic sand filters feature a polymer mix that's abrasion-proof for long lasting performance and durable protection against sand and water.

Warranty.

Waterco is proud to show its ultimate confidence in its range of thermoplastic filters by offering a 10 year* (5+5) tank warranty and 1 year warranty on all other components.

** Commercial applications attract a 5 year (1+4) tank warranty.*

Thermoplastic Sand Filter Technical Specifications.

Code	15 97 250 400	15 97 250 450
Model	T400	T450
Inner diameter	400mm	450mm
Valve size	50mm/1½"	50mm/1½"
Filter area	0.13m^2	0.16m^2
Media volume	27L	51L
Sand 16/30	40kg	75kg
Bed depth	160mm	250mm
Maximum flow	6m^3/hr	8m^3/hr
Maximum pool size	36m^3	45m^3

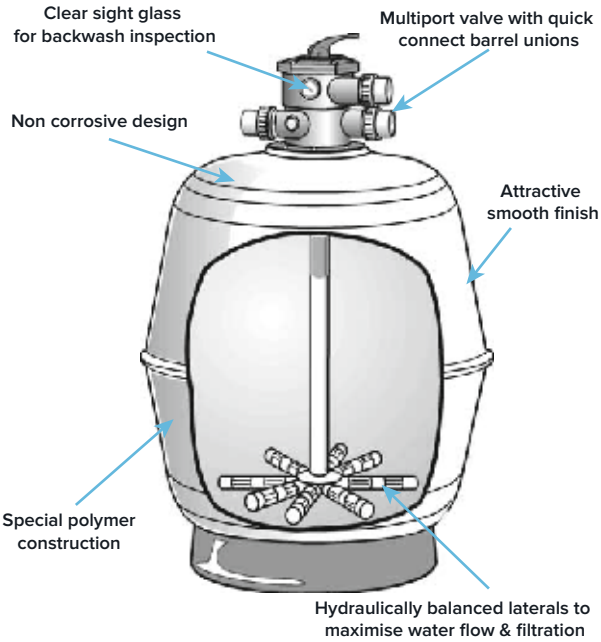

Thermoplastic Sand Filter Dimensions.

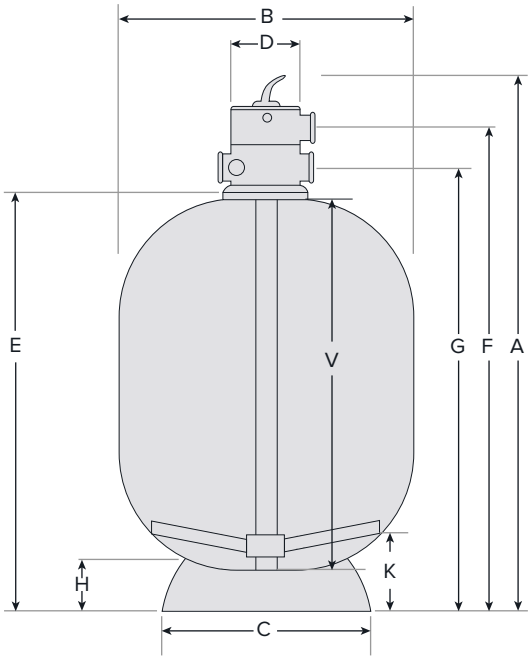

Code	Model	A	B	C	D	E	F	G	H	V	K
15 97 250 400	T400	775mm	460mm	280mm	180mm	530mm	642mm	584mm	34mm	481mm	89mm
15 97 250 450	T450	840mm	504mm	280mm	180mm	595mm	707mm	649mm	30mm	530mm	112mm

Waterco Exotuf Filters

Exotuf filters: superior strength and dependability.

Designed to cope with the cyclic pressures of the modern day swimming pool, Exotuf filter vessels are precision injection moulded for superior strength and dependability. Exotuf filters are ideal for pools equipped with in floor cleaning systems and high powered pumps.

- Granular media filtration.
- Pressure rated at 3.5 bar.
- Multiport valve for ease of use.
- Corrosion and UV resistant.

Ease Of Maintenance.

Cleansing the filter simply requires turning the filter's multiport lever from the "filter" position to the "backwash" position, which reverses the flow of water in the filter, flushing the filter bed.

Superior Strength.

Exotuf filters are considered one of the strongest filters within its class. Its filter vessel is precision injection moulded within minimal tolerances for enhanced structural strength.

Pressure rated at 3.5 bar, Exotuf filters are ideal for pools equipped with in floor cleaning systems and high powered pumps.

Warranty.

Exotuf filters are covered by a 10 year tank warranty and 1 year warranty on all other components.
Commercial installations are covered by a 5 year (1 year full + 4 years pro rata) tank warranty and 1 year warranty on all other components.

Please refer to Waterco's warranty terms and conditions.

Filter Mode.

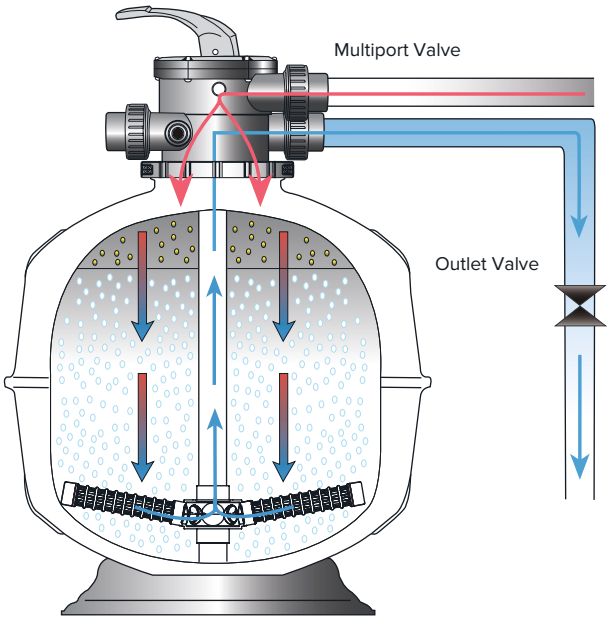

Backwash Mode.

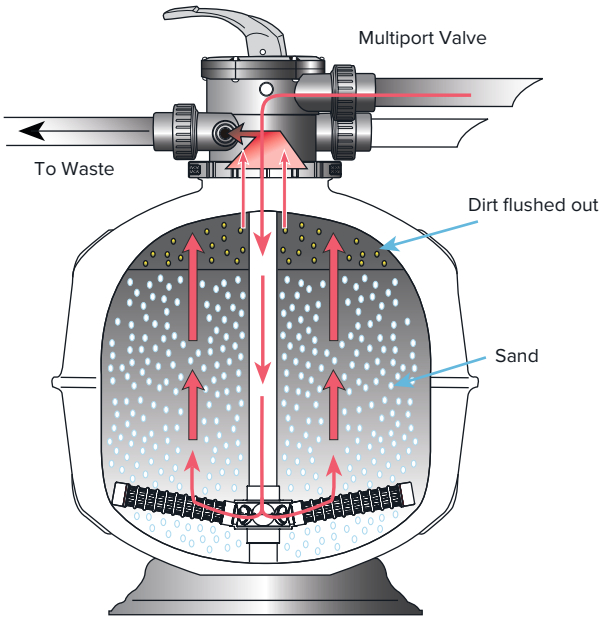

Features.

1. Multiport valve with ergonomic handle and quick connect barrel unions.
2. Clear sight glass for backwash inspection.
3. Pressure gauge to determine the filter's capacity.
4. Multiport valve clamp provides 360° orientation of the multiport valve for simple installation and service.
5. UV and corrosion resistant.
6. Hydraulically balanced flow distribution, to maximise filtration and backwashing.
7. Large filter base for stable floor mounting.

Maximum working temperature of 50°C

Waterco Exotuf Filters

Exotuf Top Mount Filter Technical Specifications.

Code	Model	Valve Size	Inner Diameter	Filter Area	Bed Depth	Maximum Flow	Maximum Pool Size	Backwash Flow Rate	Sand	Zeoplus/ Glass
15 97 250 500	E500	50mm/1½"	500mm	0.20m^2	250mm	7.1m^3/hr	57m^3	8.8m^3/hr	90kg	70kg
15 97 250 600	E600	50mm/1½"	600mm	0.28m^2	250mm	14m^3/hr	81m^3	11.5m^3/hr	130kg	105kg

Exotuf Top Mount Filter Dimensions.

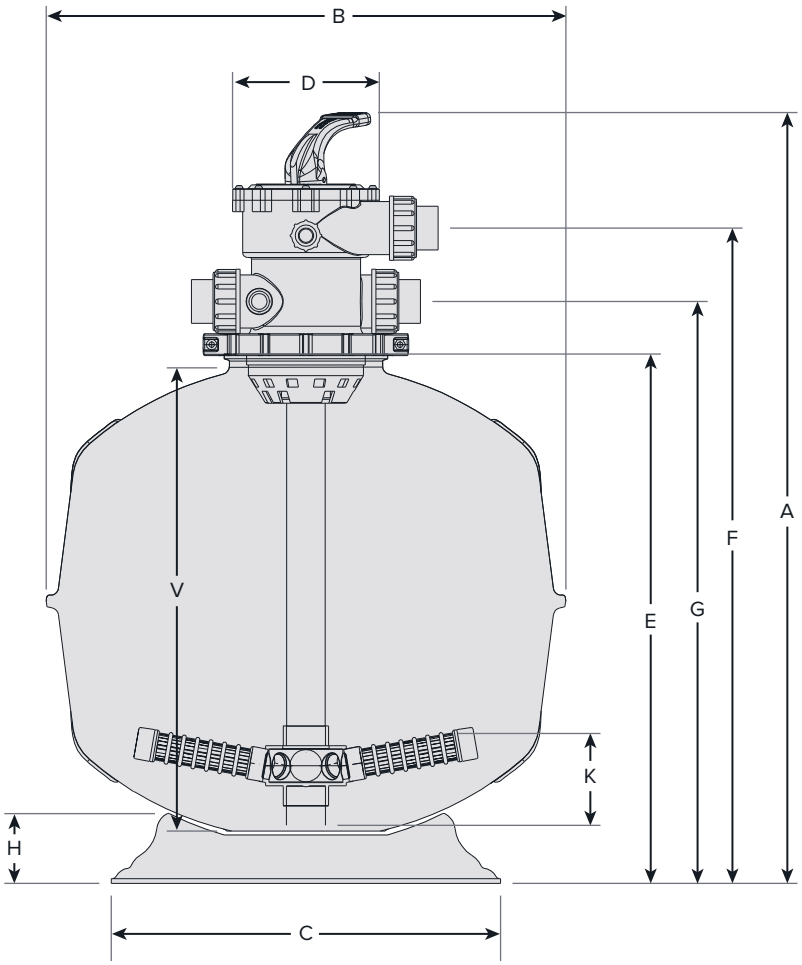

Code	Model	Valve Size	A	B	C	D	E	F	G	H	V	K
15 97 250 500	E500	50mm/1.5"	905mm	550mm	484mm	182mm	618mm	762mm	671mm	88mm	522mm	108mm
15 97 250 600	E600	50mm/1.5"	942mm	650mm	484mm	182mm	655mm	799mm	708mm	88mm	560mm	115mm

Exotuf Side Mount Filter Technical Specifications.

Code	Model	Valve Size	Inner Diameter	Filter Area	Bed Depth	Maximum Flow	Maximum Pool Size	Backwash Flow Rate	Sand	Zeoplus/ Glass
15 97 253 060	E600	50mm/1½"	600mm	0.28m²	360mm	13.6m³/hr	81m³	14m³/hr	175kg	140kg
15 97 253 062	E600	63mm/2"	600mm	0.28m²	360mm	13.6m³/hr	81m³	14m³/hr	175kg	140kg

Exotuf Side Mount Filter Dimensions.

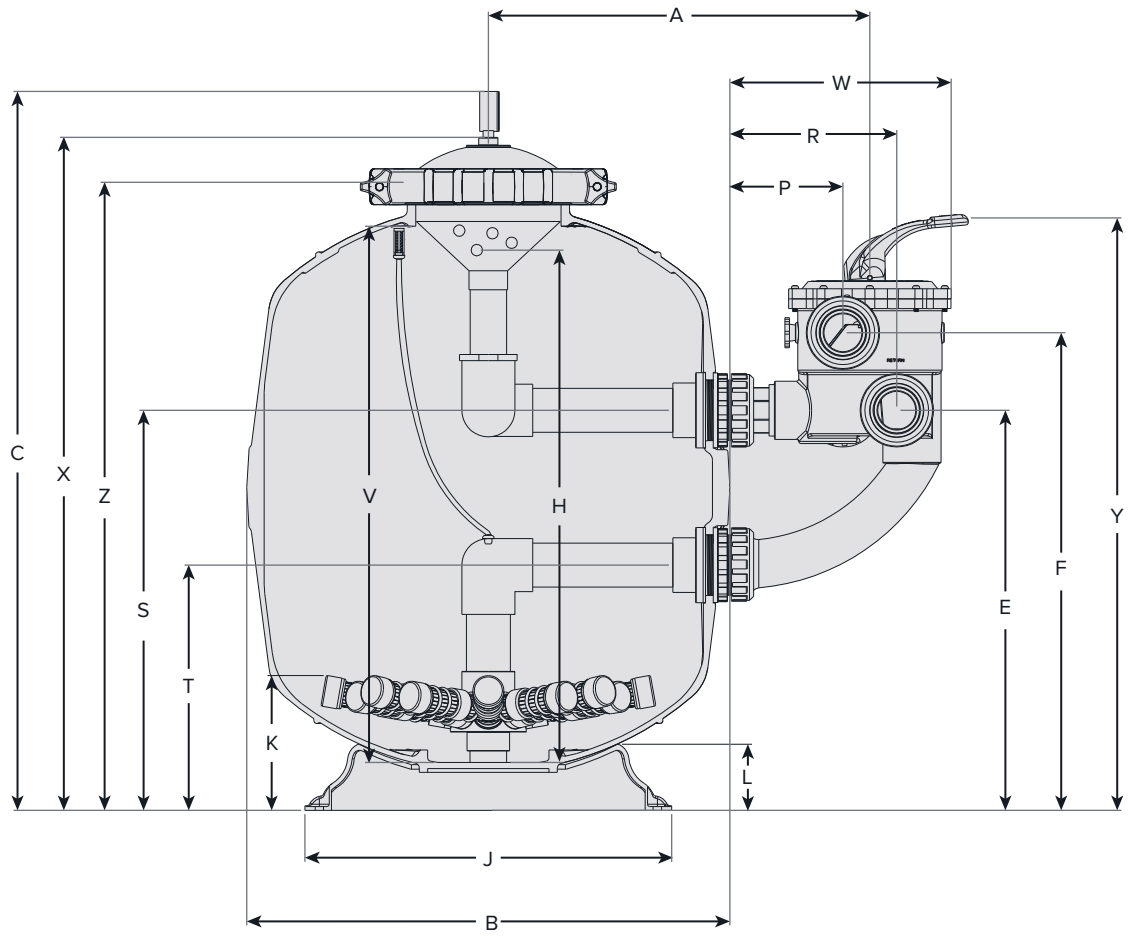

Code	Model	Valve Size	A	B	C	W	R	P	E	F
15 97 253 060	E600	50mm/1½	498mm	635mm	954mm	270mm	213mm	135mm	537mm	591mm
15 97 253 062	E600	63mm/2	502mm	635mm	954mm	292mm	220mm	149mm	537mm	639mm

Code	K	V	H	L	X	Y	Z	J	S	T
15 97 253 060	115mm	706mm	670mm	88mm	897mm	735mm	824mm	484mm	537mm	334mm
15 97 253 062	115mm	706mm	670mm	88mm	897mm	796mm	824mm	484mm	537mm	334mm